Photo-electric sensors - Miniature design

NPN - M8 Connector : **XUM8ANXBM8**
PNP - M8 Connector : **XUM8APXBM8**

NPN - 2 m Cable : **XUM8ANXBL2**
PNP - 2 m Cable : **XUM8APXBL2**

Background suppression (BGS)

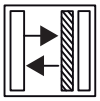

Package Content
(Example)

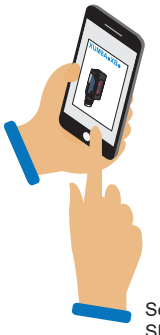

http://qr.tesensors.com/XU0007

Scan the code to access this Instruction Sheet and all product information in different languages or you can visit our website at: **www.tesensors.com**

We welcome your comments about this document. You can reach us through the customer support page on your local website.

DANGER

HAZARD OF ELECTRIC SHOCK, EXPLOSION OR ARC FLASH

- Disconnect all power before servicing equipment.
- Do not connect this device to AC power.
- The power voltage must not exceed the rated range.

Failure to follow these instructions will result in death or serious injury.

WARNING

IMPROPER SETUP OR INSTALLATION

- This equipment must only be installed and serviced by qualified personnel.
- Read, understand, and follow the compliance below, before installing the XUM Photo-electric sensor.
- Do not tamper with or make alterations on the unit.
- Comply with the wiring and mounting instructions.
- Check the connections and fastening during maintenance operations.
- The proper functioning of the XUM photoelectric sensor and its operating line must be checked regularly and according to the application (for example number of operations, level of environmental pollution, etc.).

Failure to follow these instructions can result in death, serious injury, or equipment damage.

Mounting and tightening torques

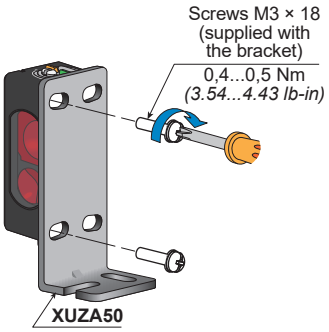

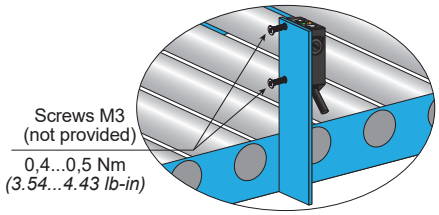

CAUTION

DETERIORATION OF PROTECTION DEGREE

Do not apply excessive torque on the sensor during the installation process.

Failure to follow these instructions can result in injury or equipment damage.

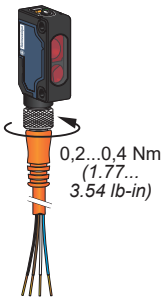

LEDs and settings

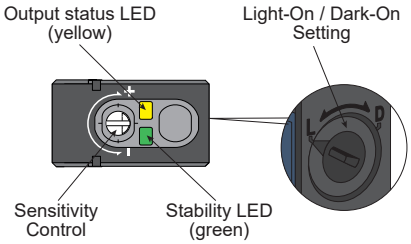

Wiring diagrams

M8 Metal Connector - 4 pins

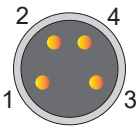

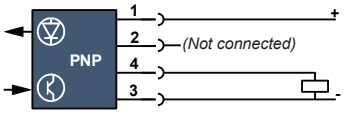

XUM8APXBM8

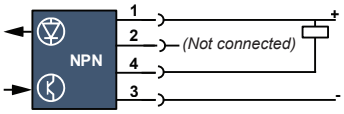

XUM8ANXBM8

2 m Cable - 3 wires

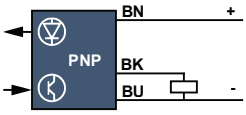

XUM8APXBL2

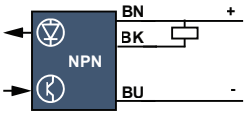

XUM8ANXBL2

Wiring precaution

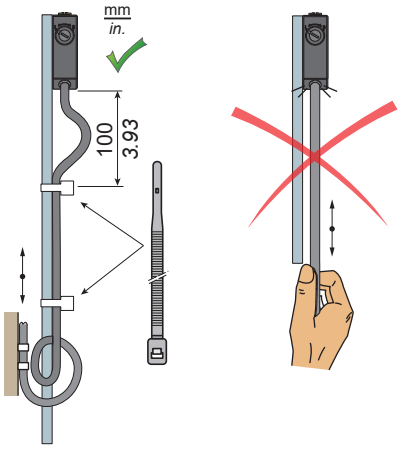

NOTICE

REDUCTION OF SERVICE LIFE

Do not pull on the sensor cable.

Failure to follow these instructions can result in equipment damage.

Electrical equipment should be installed, operated and maintained only by qualified personnel.
No responsibility is assumed by Schneider Electric for any consequences arising out of the use of this material.

Dimensions

mm / in.

1 mm = *0.0397 in.*

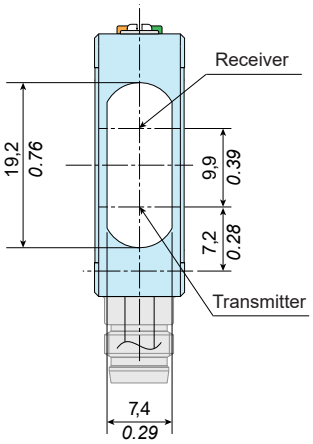

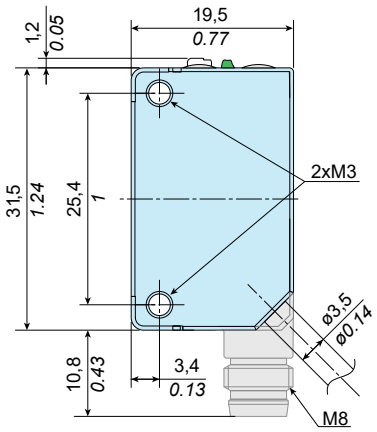

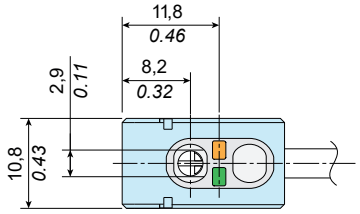

XUZA50

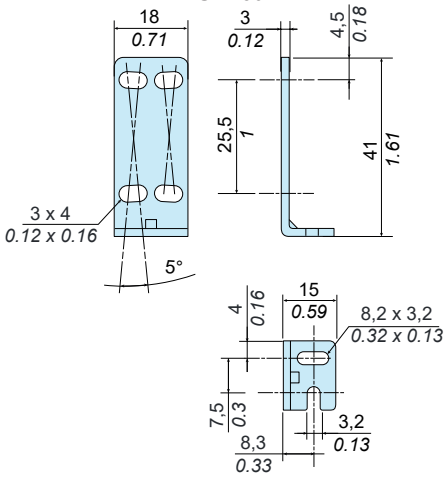

XUZASM04

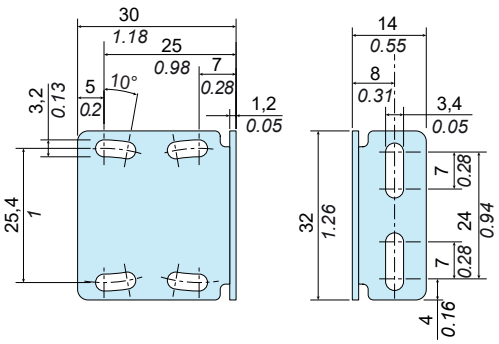

XUZASM02

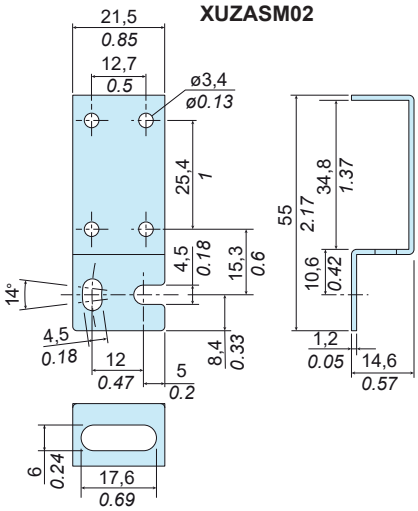

XUZASM03

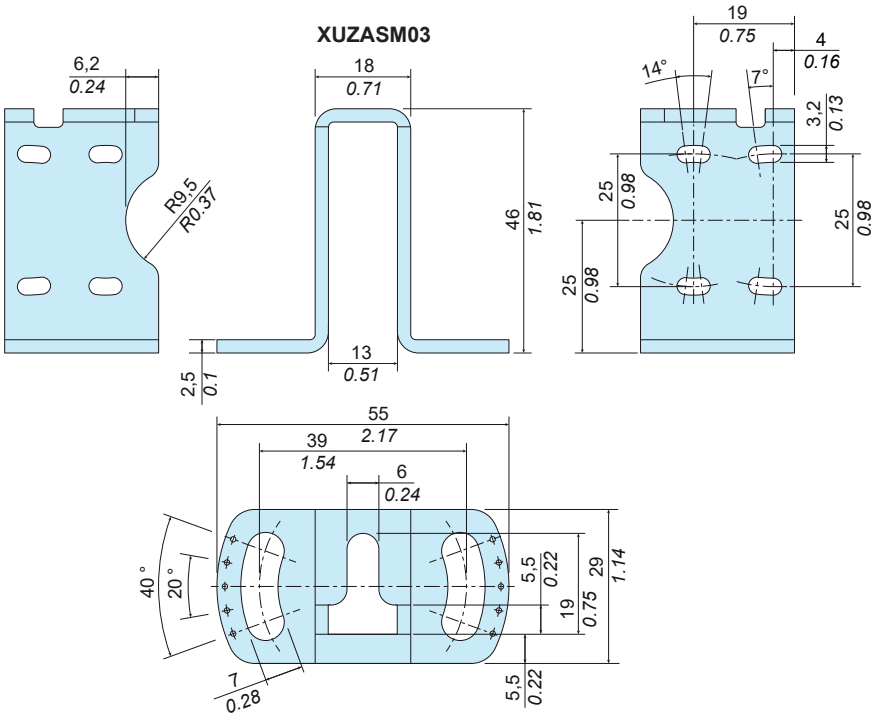

Accessories

Mounting brackets (to order separately)

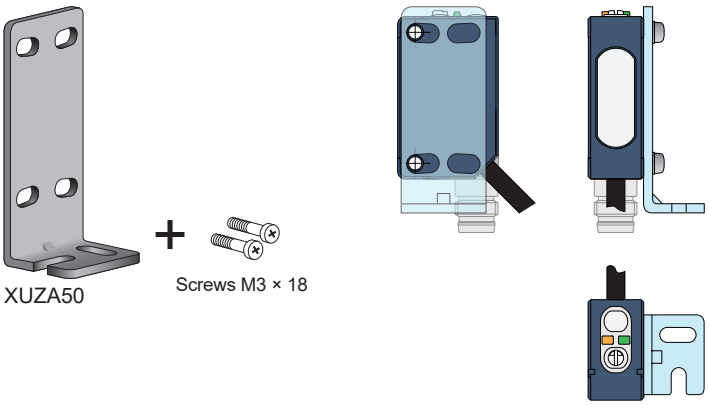

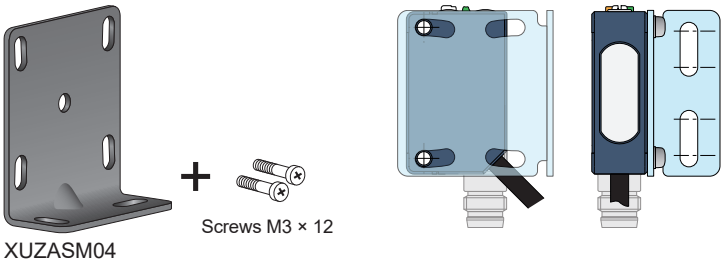

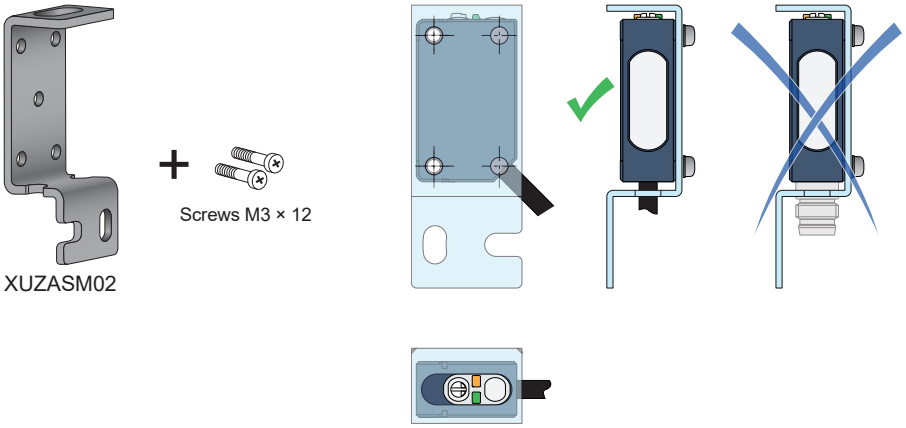

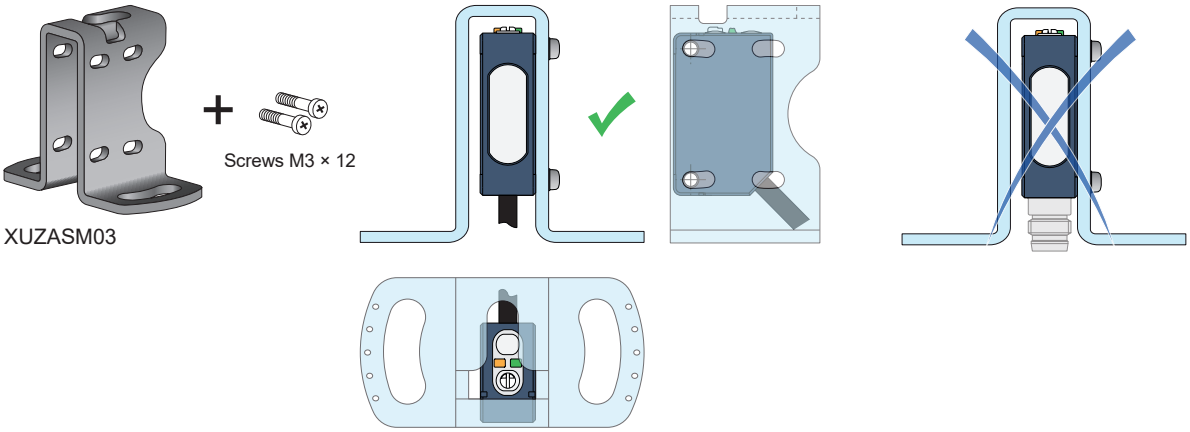

Pre-wired female connectors (examples)

PVC cable for general use
PUR cable for severe industrial environments

M8, 4 pins	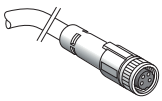		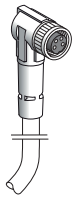		M8 - M12, 4 pins	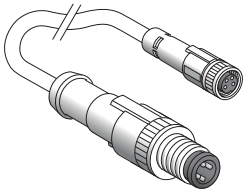	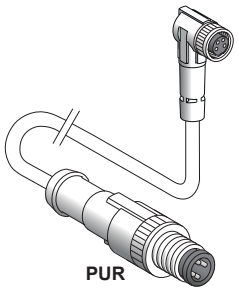
Cable length	**PVC**	**PUR**	**PVC**	**PUR**	**Jumper length**	**PUR**	**PUR**
2 m / *6.56 ft.*	XZCPV0941L2	XZCP0941L2	XZCPV1041L2	XZCP1041L2	1 m / *3.28 ft.*	XZCR1509041J1	XZ CR1510041J1
5 m / *16.4 ft.*	XZCPV0941L5	XZCP0941L5	XZCPV1041L5	XZCP1041L5	2 m / *6.56 ft.*	XZCR1509041J2	XZCR1510041J2
10 m / *32.8 ft.*	XZCPV0941L10	XZCP0941L10	XZCPV1041L10	XZCP1041L10			

Sensors position adjustment

- Translate the sensor or object, up/down and left/right. When the setting is optimal, the stability indicator (green) is lit.
- Check sensor operation with the object and adjust the sensor, if necessary.

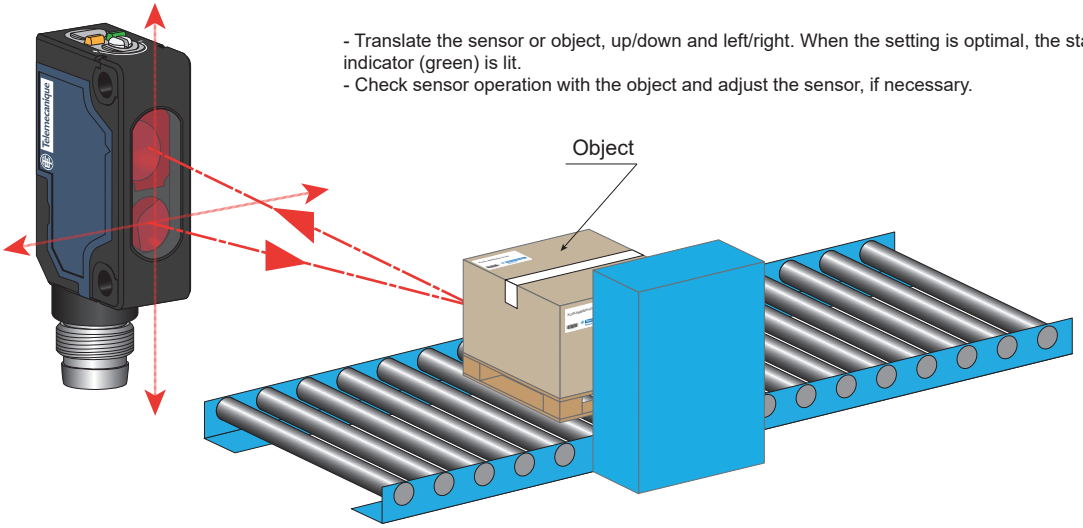

LED status with LO output function

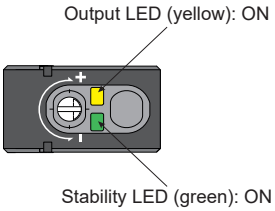

Install the sensor head perpendicular to the object transfer as shown below to ensure good detection.

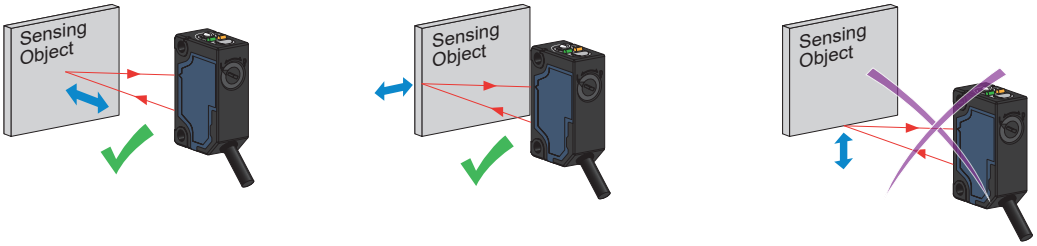

Anti-interference for side by side mounting

Anti-interference system to ensure good detection even disturbed by another sensor when installed side by side.

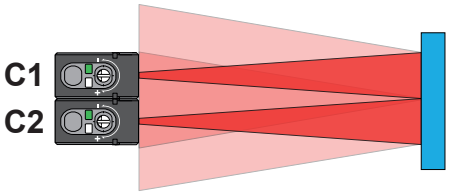

Anti-interference system allows a side by side installation and ensures a reliable detection.

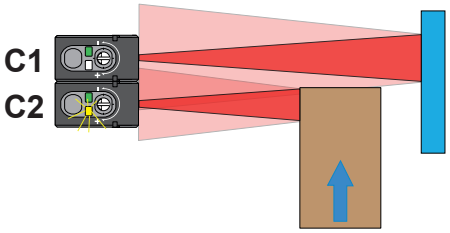

This Anti-interference system ensures an object detection in all conditions.

Output mode setting: Light-On or Dark-On (Light-On by default)

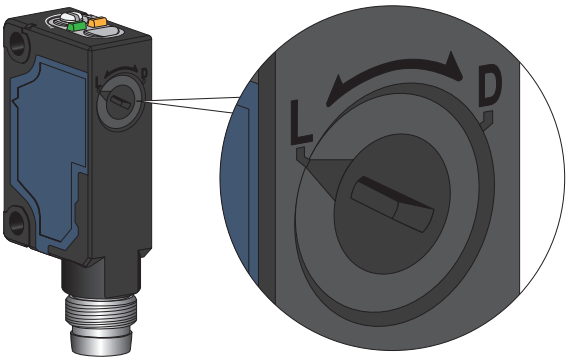

Light-On / Normally Open	Dark-On / Normally Closed
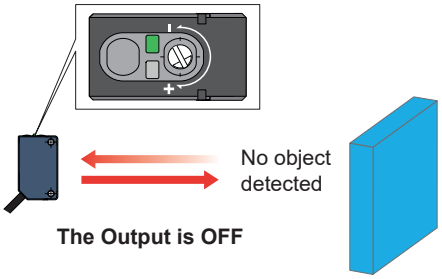 The Output is OFF	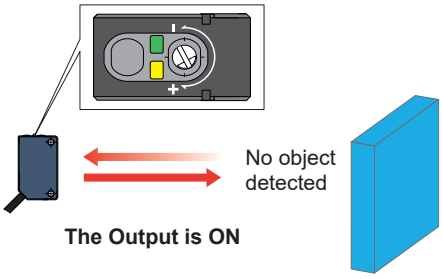 The Output is ON
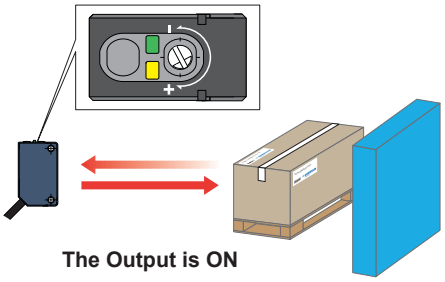 The Output is ON	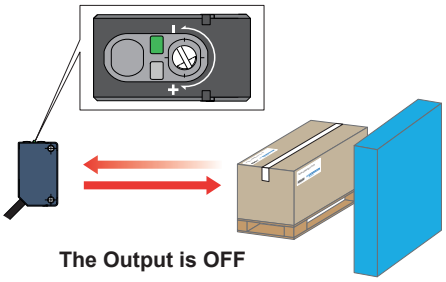 The Output is OFF

Sensor sensitivity adjustment

For an accurate detection, follow the set up below. (eg. Dark objects, with holes or with small size to reflect properly the light beam).

	Light-On	Dark-On
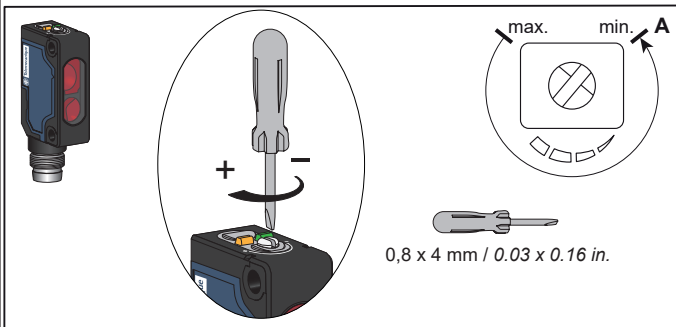	1-Connect the sensor to the power supply *(see page 1 for the wire connection & page 8 for the power voltage).* Before settings, start with the potentiometer at the minimum position (resulting to point A). 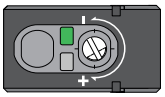	1-Connect the sensor to the power supply *(see page 1 for the wire connection & page 8 for the power voltage).* Before settings, start with the potentiometer at the minimum position (resulting to point A). 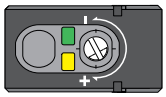
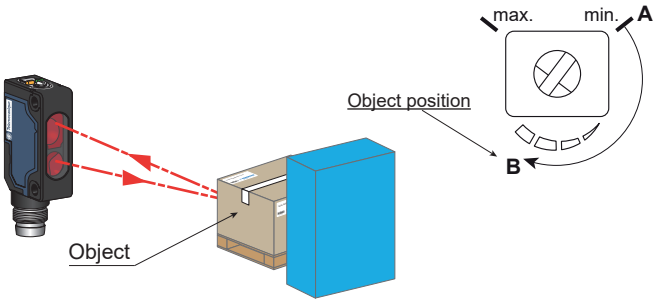	2-Put the object in front of the sensor. Turn the potentiometer clockwise until to detect the object. The output led (yellow) & the stability led (green) switch on (resulting to point B). Several turns can be done to adjust the detection. 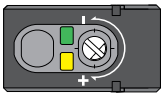	2-Put the object in front of the sensor. Turn the potentiometer clockwise until to detect the object. The output led (yellow) switches off & the stability led (green) switches on (resulting to point B). Several turns can be done to adjust the detection. 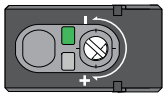
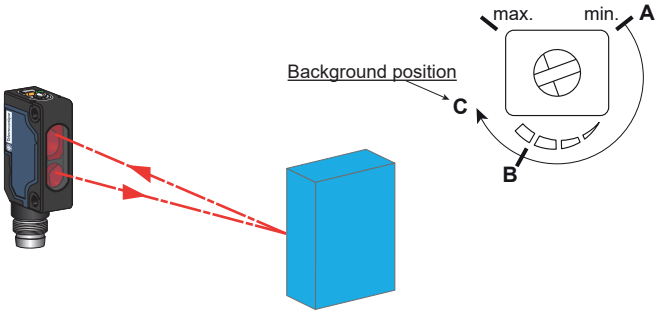	3-Remove the object to set the background position. Turn the potentiometer clockwise until detecting the background. The output led (yellow) & the stability led (green) switch on (resulting to point C). 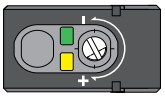	3-Remove the object to set the background position. Turn the potentiometer clockwise until detecting the background. The output led (yellow) switches off & the stability led (green) switches on (resulting to point C). 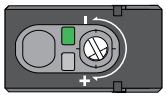
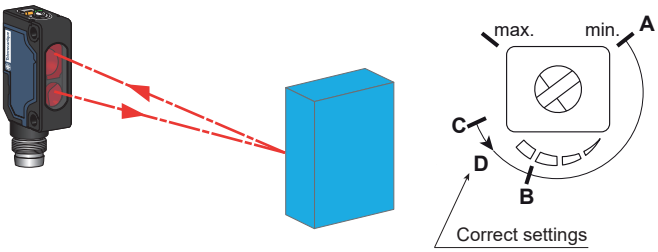	4-Set the middle point between the point B and C (resulting to point D). The Sensor is set and ready to detect. 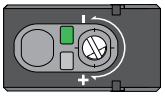	4-Set the middle point between the point B and C (resulting to point D). The Sensor is set and ready to detect 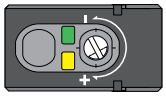

Detection curves

1 mm = *0.0397 in.*

Lateral displacement (Preset 100 mm)

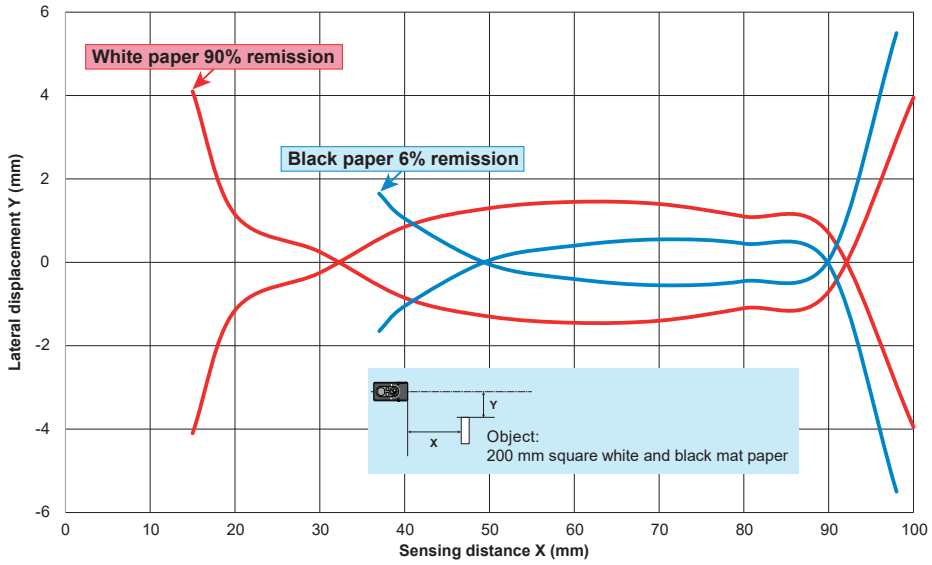

Lateral displacement (Preset 200 mm)

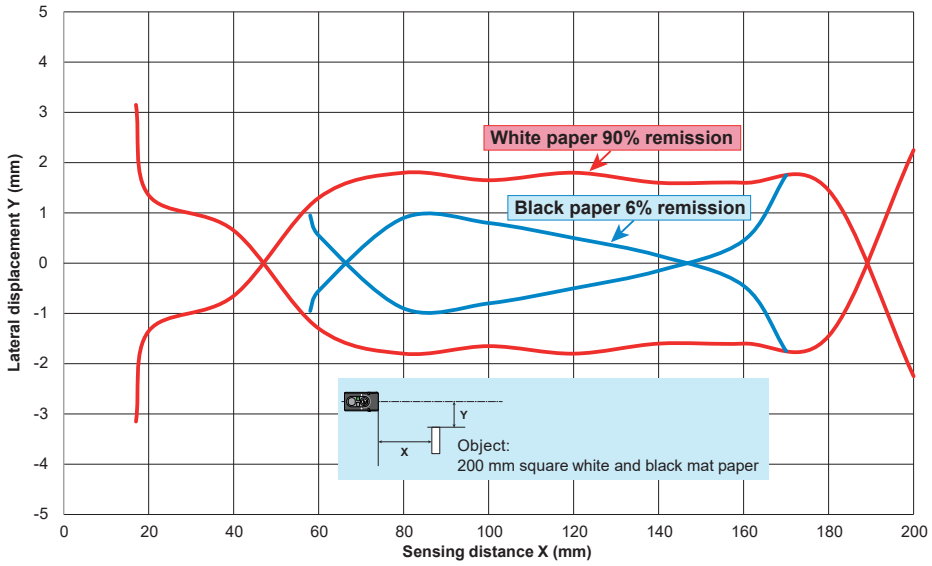

Light beam diameter

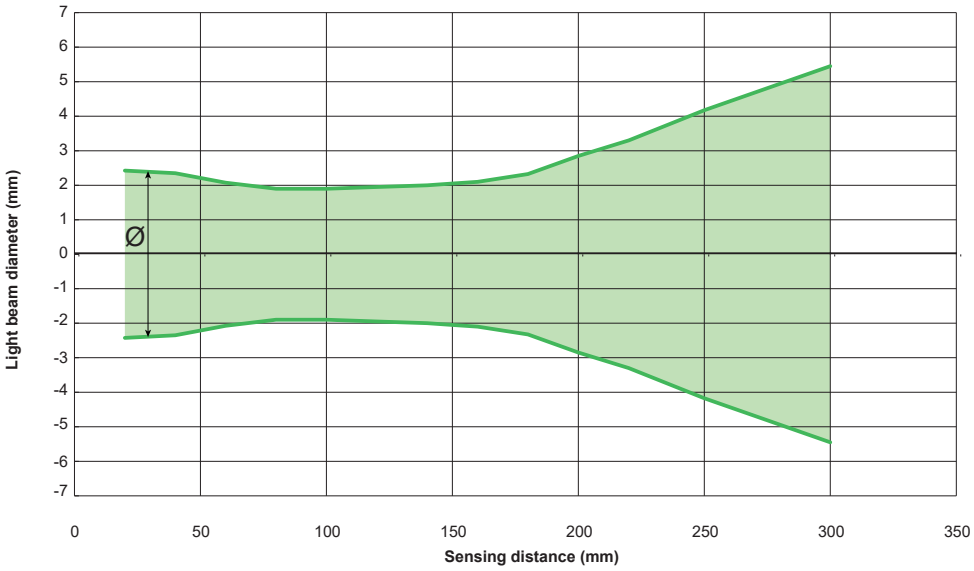

Minimum distance between the object to detect and white background (mm)

1 mm = *0.0397 in.*

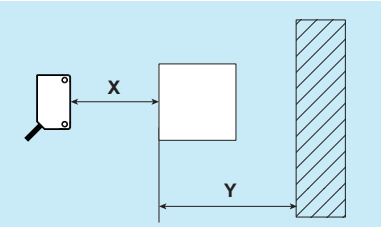

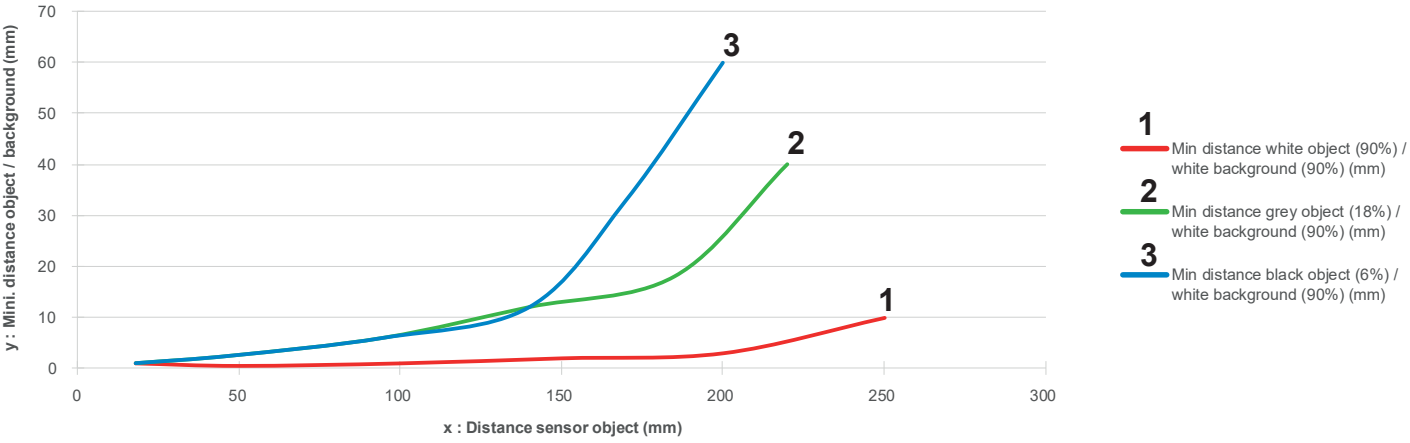

Characteristics

1 mm = *0.0397 in.*

Certification	CE - UKCA - cULus
Sensing Range	Sensing distance (mm) : 4 mm...300 mm (White paper...) White object SN (90%): 4 mm...300 mm Grey object SN (18%): 5 mm...265 mm Black object SN (6%): 8 mm...200 mm
Color of detection light beam	Red
Spot size of the light beam on the target	4,15 mm at 60 mm / 3,8 mm at 100 mm / 4,1 mm at 150 mm / 5,7 mm at 200 mm / 8,35 mm at 250 mm *(See the graph, page 6)*
Hysteresis	2% < H < 20% at Sn
Sensing distance setting	Potentiometer - 6 turns
Light-On/Dark-On selection	Switch (~ 120 degrees)
Output type	PNP or NPN
ON Voltage drop	< 2 V max.
Current consumption	< 20 mA max.
Switching capacity	100 mA
Response time	0,5 ms max.
Recovery time	0,5 ms max.
Switching frequency	1000 Hz
Electrostatic discharge immunity	4 kV (Contact), 8 kV (Air) conforming to **IEC 61000-4-2**
Electromagnetic field immunity	10 V/m conforming to **IEC 61000-4-3**
Fast transients immunity	Burst 5 kHz - 2 kV conforming to **IEC 61000-4-4**
Conducted disturbances immunity	10 V conforming to **IEC 61000-4-6**
Emissivity Radiated disturbances	Class A conforming to **EN 55011 / CISPR 11**
Electrical shock	1 kV 500 Ohm (1,2/50 µs)
Power Voltage	12...24 Vdc Ripple p-p 10% maximum - Operating range 10...30 Vdc (including ripple) III
Product protection	Power supply : Reverse polarity protection Output: Short circuit protection Reverse polarity protection
Light Immunity	Operating atmosphere; Sunlight 40 kLx max. Incandescent light 10 kLx max.
Ambient Temperature	Operating : - 30...+55 °C *(-22...+131 °F)*, Storage : - 40...+70 °C *(-40...+158 °F)*
Ambient Humidity	Operating : 35...95% RH, Storage : 35...95% RH
Degree of protection	IP65, IP67 conforming to **IEC 60529**
Vibration resistance	Frequency range: 10 Hz to 500 Hz Acceleration: 9 g_n
Shock resistance	Peak acceleration: 100 g_n Duration of the pulse: 11 ms
Material	Housing: PBT, Lens: PMMA, Operation cover: PC, Adjustment potentiometer: PBT

Manufacturer :
Schneider Electric Industries SAS
35 rue Joseph Monier
92500 Rueil Malmaison
France

UK Representative :
Schneider Electric Limited
Stafford Park 5
Telford, TF3 3BL
United Kingdom